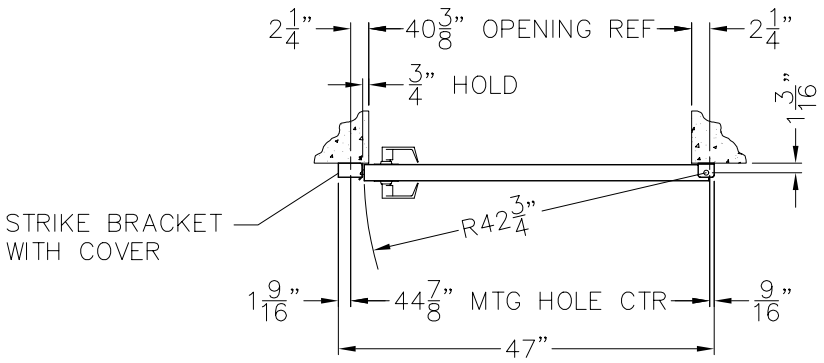

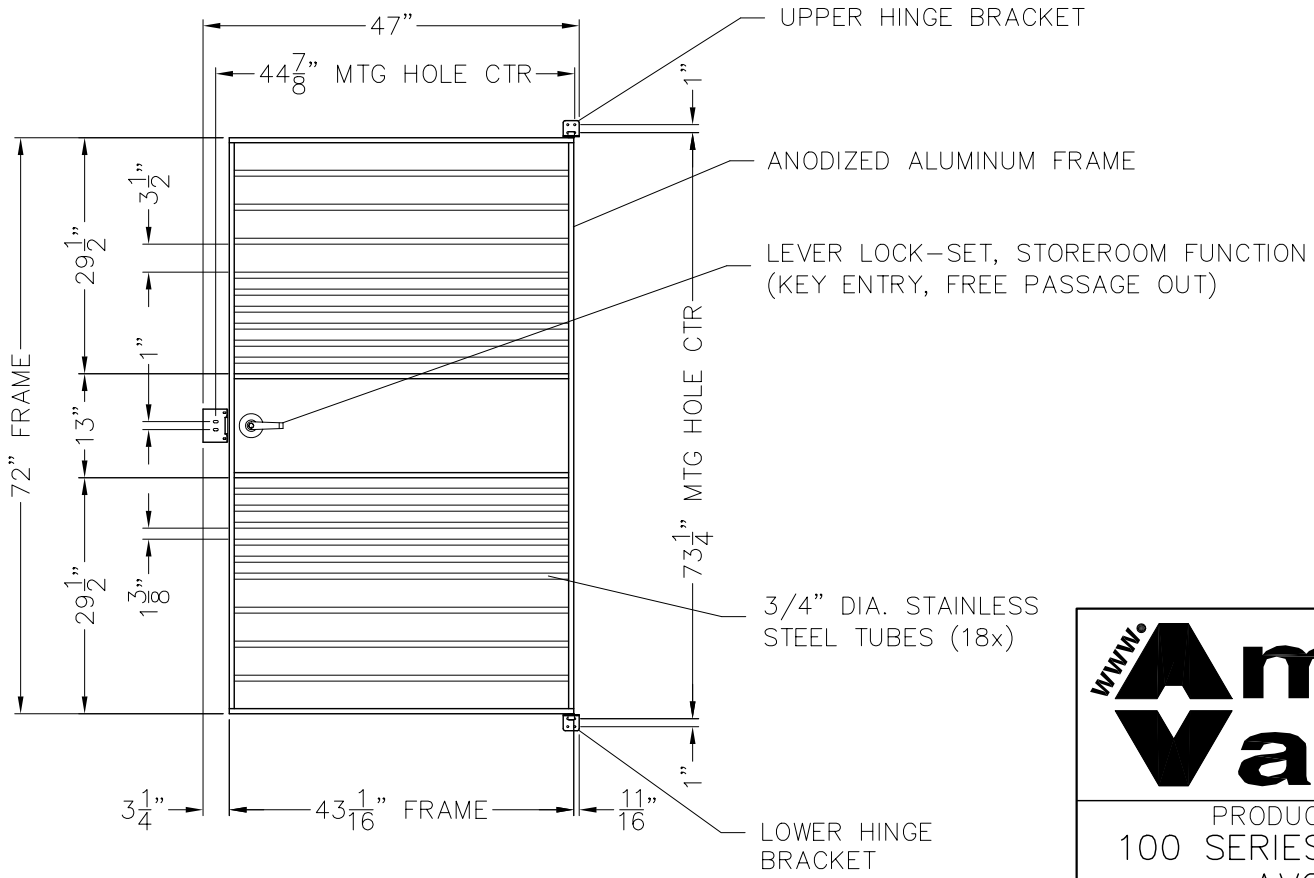

American Vault.us

PRODUCT APPLICATION DRAWING

100 SERIES ROD STYLE DAY GATE

AVC P/N 102-2100

SIZE	DWG NO	DATE	SHEET
A	20113	01.06.2014	1 OF 1